Tagra | PISB24 | 22.2x5mm | Roll On LED Diffuser | Silicone |Opal | 10M

DIFSIL-PLSTD-10M/OP / ITM002652



Datasheet

13-11-2026

www.tagra-lighting.co.uk

support@tagra-lighting.co.uk

Tagra | PISB24 | 22.2x5mm | Roll On LED Diffuser | Silicone |Opal | 10M



Length	Material	Warranty
10m	PC	5 Years

SKU: DIFSIL-PLSTD-10M/OP
ITM: ITM002652

Key Features:

- **Product Length:** 10m
- **Diffuser Colour:** Opal
- **Dimensions (W x H):** 22 x 5mm

Mechanical Data			
Diffuser Shape:	Flat	**Illuminated Surface Width:**	23.6mm
Max. LED Strip Light Width:	20mm	**Product Weight:**	1000g
Dimensions (LxWxH):	10000 x 22 x 5mm		

Photometric Data			
Beam Angle:	105°	**Diffuser Colour:**	Opal

Environmental Data			
Body Material:	Polycarbonate	**Ingress Protection (IP):**	IP20
Mounting Type:	Plaster In		

Dimension Drawing

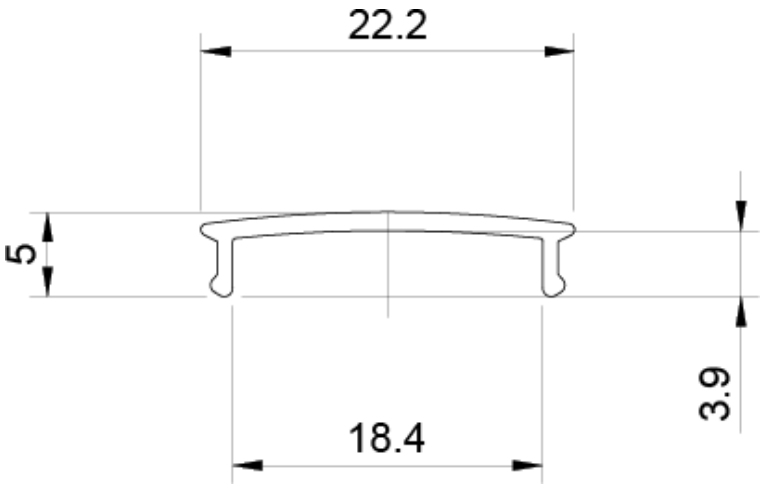

Packaging Data

Items / Sets Per Pack:	1	**Packaging Height:**	22mm
Packaging Length:	420mm	**Packaging Width:**	300mm
Packaging Weight:	1011.55g		

Disclaimer

Tagra Lighting have taken reasonable care to ensure that the information in this datasheet is accurate at time of publication however it should be noted that all specifications are subject to tolerance. Descriptive specifications such as colour are subjective. Tagra Lighting reserve the right to update specifications without notice. The information in the datasheet may only be relied on by customers of Tagra Lighting in accordance with applicable terms and conditions.

Tagra Lighting is a trading name of T.R Ventures Limited, a company incorporated in England with registered number 07757720. Our registered office is Unit 2, Southfield Industrial Estate, Trafford Park, M17 1SJ.

www.tagra-lighting.co.uk

support@tagra-lighting.co.uk